Simulation of MEMRISTORS in the presence of a high-frequency forcing function

M. Condon, A. Deaño and A. Iserles

The letter is concerned with the simulation of MEMRISTORS when they are subject to high-frequency forcing functions. A novel asymptotic-numeric simulation method is applied. For systems involving high-frequency signals or forcing functions, the superiority of the proposed method in terms of accuracy and efficiency when compared to standard simulation techniques shall be illustrated. Relevant dynamical properties in relation to the method shall also be considered.

Introduction: Leon O. Chua postulated the memristor as the fourth circuit element in 1971 [1]. However, it was not until its solid-state fabrication in 2008 [2] that it attracted significant interest in view of its many potential applications ranging from secure communications [3] to a low-cost technology for non-volatile memories [4]. In this letter, we examine the simulation and analysis of a chaotic memristor-based circuit when it is subject to a high-frequency forcing function. The behaviour of the circuit is governed by a nonlinear differential equation system. However, the presence of the high-frequency forcing function renders solution by standard quadrature techniques expensive and inefficient. To this end, this letter proposes a novel simulation technique that unlike traditional quadrature techniques improves as frequency increases.

Memristor Circuit: The memristor circuit considered is shown in Fig. 1 and the circuit values are taken from [5].

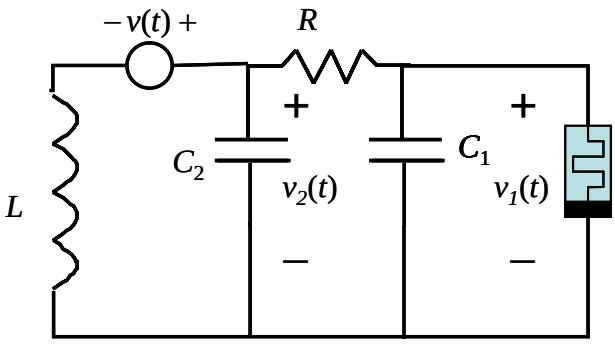

Fig. 1 *Memristor Circuit*

The equations governing the circuit behaviour are:

$$\frac{d\phi(t)}{dt} = v_1(t)$$
$$\frac{dv_1(t)}{dt} = \frac{1}{C_1}\left(\frac{v_2(t)-v_1(t)}{R} - W(\phi(t))v_1(t)\right)$$
$$\frac{dv_2(t)}{dt} = \frac{1}{C_2}\left(\frac{v_1(t)-v_2(t)}{R} - i_L(t)\right)$$
$$\frac{di_L(t)}{dt} = \frac{v_2(t)}{L} - \frac{v(t)}{L} \qquad (1)$$

$\phi(t)$ is the magnetic flux between the memristor terminals and $W(\phi(t))$ is termed the memductance. $v(t) = V\cos\omega t$ is the high-frequency forcing function. For the current work, the memductance is selected as a quadratic function [5] of the magnetic flux

$$W(\phi(t)) = \alpha + 3\beta\phi^2 \qquad (2)$$

where α and β are constants. $i_L(t)$ is the current flowing in the inductor *L*. $v_1(t)$ and $v_2(t)$ are voltages across the capacitors, C_1 and C_2.

Asymptotic-Numeric Method: Equation (1) is of the general form

$$\frac{dy(t)}{dt} = f(t,y) + s(t) \qquad (3)$$
$$s(t) = \sum_{m=-\infty}^{\infty} a_m(t)e^{im\omega t}$$

s(*t*) is the forcing function.
The proposed simulation method involves expanding the solution to (3) in inverse powers of ω^{-1} as follows:

$$y(t) \approx p_{0,0}(t) + \sum_{r=1}^{\infty}\frac{1}{\omega^r}\sum_{m=-\infty}^{\infty} p_{r,m}(t)e^{im\omega t} \qquad (4)$$

The series in (4) is substituted into the differential equation (3). The coefficients are then equated on two levels – in powers of ω^{-1} and frequency terms (values of *m*). This results in a series of ordinary differential equations (ODEs) and recursive relations:

$$\dot{p}_{0,0}(t) = f(p_{0,0},t) + a_0(t) \quad \text{with } p_{0,0}(0) = y(0)$$

$$\dot{p}_{1,0}(t) = f_1(p_{0,0})p_{1,0}(t) \text{ and}$$

$$\sum_{m=-\infty}^{\infty} p_{1,m}(0) = 0$$

$$\vdots$$

$$\dot{p}_{r,0}(t) = f_1(p_{0,0})p_{r,0}(t) + g_r(p_{0,0},\cdots p_{r-1,m})$$

And

$$p_{1,m}(t) = \frac{a_m(t)}{im} \text{ when } m \neq 0 \qquad (5)$$
$$\vdots$$
$$p_{r+1,m}(t) = \frac{h_r(p_{0,0}\cdots p_{r,m})}{im}$$

$f_1(p_{0,0})$ is the Jacobian of *f* evaluated at $p_{0,0}(t)$. g_r and h_r are functions of $p_{0,0}(t)\ldots p_{r,m}(t)$ determined from Taylor series expansion of the nonlinearity about $p_{0,0}(t)$. The important point to note with the expressions in (5) is that they are independent of the high-frequency, ω. Consequently, the step size employed for solution of the ODEs in (1) or (3) is not governed by this frequency. Hence, a much larger time step can be employed resulting in considerable gains in efficiency.

Numerical Results: As in [5], time-scaling is employed to yield realistic voltage values. The circuit parameter values are $L_1 = 18mH$ $C_1 = 6.8nF$ $C_2 = 68nF$ and $R = 2000\Omega$. The forcing function is selected of amplitude *V=10* and its frequency is varied to illustrate that the superiority of the asymptotic-numerical method improves with rising frequency. The results are computed with r_{max}=2 in the series in (4). They are compared to the result computed using the ode45 solver in matlab with a relative tolerance of 10^{-12} and an absolute tolerance of 10^{-12}. Fig. 2 shows the voltage $v_2(t)$ when the input frequency is $\omega = 10^7$. Fig. 3 shows the same voltage when the forcing frequency is $\omega = 10^9$. In the first case, the error is ~10^{-7} while in the second case the error is 10^{-11}. These error values are as expected as the value of the frequencies when considered in the time-scaled version of the equations are ~350 and 35000, respectively. The result in the first case requires approximately the same computing time. However, in the second case, the result is computed >10 times as fast

emphasising the increasing efficiency and accuracy of the method for the same number of levels with increasing frequency.

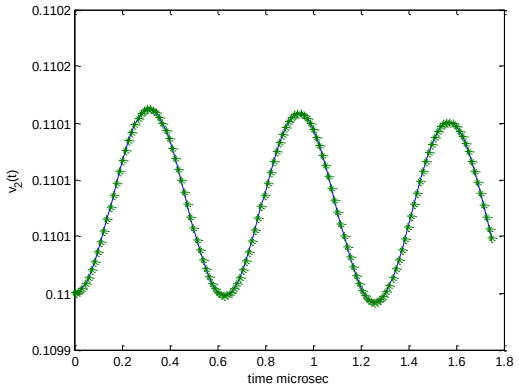

Fig. 2 v_2(t) – *Comparison between the result obtained from a standard ODE solver(solid)and the result from the proposed asymptotic method(*) when* $\omega=10^7$.

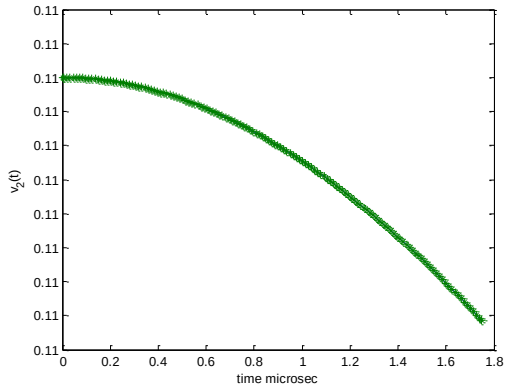

Fig. 3 v_2(t) – *Comparison between the result obtained from a standard ODE solver(solid)and the result from the proposed asymptotic method(*) when* $\omega=10^9$.

Comments on dynamical behaviour: The differential equation for $p_{0,0}(t)$ is identical to the unforced version of equation (1) (when $a_0 = 0$). Consequently, the Lyapunov exponents are the same as obtained in [5] using the Wolf method [6], (0,0.061,~0,–1.79). The positive exponent and the negative sum of the Lyapunov exponents indicate the presence of chaos. The equations for $p_{r,0}(t)$ are linear time-varying in nature. The Lyapunov exponents for the circuit in the presence of the forcing function of frequency $\omega=10^7$ are (0,0.057,~0,–1.77,0). When $\omega=10^9$, the exponents are (0,0.048,~0,–1.81,0). Again, the results indicate the presence of chaos.

Conclusions: The letter has applied a novel asymptotic-numeric method for the simulation of a forced Memristor chaotic circuit. The method is such that its accuracy and efficiency improve with rising frequency.

References

1 Chua, L.O.: 'Memristor – The missing circuit element', *IEEE Trans. on Circuit Theory*, CAT-18:5, pp. 507-519, 1971

2 Strukov, D.B., Snider, G.S., Stewart, G.R. and Williams, R.S.: 'The missing memristor found', *Nature*, **453**, 80-83, 2008

3 Stavroulakis P, *Chaos Applications in Telecommunications*, CRC Press, 2006.

4 Itoh, M. and Chua, L. O.: 'Memristor oscillators', *International Journal of Bifurcation and Chaos*, Vol. 18, No. 11, pp. 3183-3206, 2008

5 Muthuswamy, B.: 'Implementing memristor based chaotic circuits', *International Journal of Bifurcation and Chaos*, Vol. 20, No. 5, pp. 1335-1350, 2010

6 Wolf, A., Swift, J. B., Swinney, H. L. and Vastano, J..A.: 'Determining Lyapunov exponents from a time series', *Physica D*, Vol. 16, 285-317, 1985

Authors' affiliations:

M. Condon, School of Electronic Engineering and The Rince Institute, Dublin City University, Dublin 9, IRELAND
Email: marissa.condon@dcu.ie
A. Deaño, Dept. of Mathematics, University Carlos III de Madrid, Avda. Universidad, 30 Leganés 28911, Madrid, Spain
A. Iserles, Dept. of Applied Mathematics and Theoretical Physics, Centre for Mathematical Sciences, University of Cambridge, Wilberforce Road, Cambridge, CB3 0WA, UK.